GALUCHO

OPERATOR'S HANDBOOK AND SPARE PART'S LIST

MCH- MINI FURROW PLOUGHS

MODELS ⇨ MCH1
MCH2

CH- 2 TO 5 FURROW PLOUGHS AUTOMATIC OR HYDRAULIC REVERSION

MODELS ⇨ CH2-M
CH2-H
CH3-H
CH3/4-4/5H

CH3-H

INDEX

RECOMMENDATIONS TO THE OWNER
CONDITIONS OF GUARANTEE
INNOVATIONS
1- EXPLANATORY NOTE
2- CONSTITUTION
3- ASSEMBLAGE
4- ATTACHMENT TO THE TRACTOR
5- TECHNICAL SPECIFICATIONS
6- ADJUSTMENTS
7- WORK
8- MAINTENANCE
9- REPLACING THE PARTS OF GREATEST WEAR
10- SECURITY REGULATIONS
11- PRATICAL ADJUSTMENTS

RECOMMENDATIONS TO THE OWNER

The decision to opt for GALUCHO was a good one. The result of many years of
experience, under the most difficult and diverse working circumstances, GALUCHO material gives complete satisfaction to its many thousands of users, both in Portugal and in over 40 countries, of different continents, where it is already at work. We are sure that, if used properly, and given the necessary care to maintenance, the machine you have just acquired will perform the efficient and economical job for which it was designed, and which a user has the right to expect from it. The present manual contains very important instructions concerning set-up, tuning, maintenance, etc., As well as diagrams and a parts list.
Begin by reading it, attentively, in order to familiarise yourself with the material. Then, keep it in secure and accessible place, for future consultation.
If you still have doubts, consult the distributor who supplied the machine, or else consult us, as it is in all of our interests that you be satisfied with, and obtain maximum yield from your purchase.
Recordings and technical data are indicated by name and subject to alterations without
previous notification.

GALUCHO - Indústrias Metalomecânicas, S.A.
Av. Central Nª4
2705-737 S. João das Lampas - PORTUGAL
Telef.: (351) 21 960 85 00 Fax: (351) 21 960 85 85
www.galucho.pt
agricola@galucho.pt

CONDITIONS OF GUARANTEE

1- Our company guarantees all the agricultural equipment which is manufactured for a period of two years from the date of invoice.
1.1- This guarantee only includes the supply of replacement parts or components which are proved to be deficiently made or installed, and does not cover the payment of manual labour or displacement costs.
1.2- Any components considered by this company to the worn out, are excluded from the guarantee.
1.3- The guarantee given by this company will not include any parts not made by themselves, for examples tyres, which will remain the exclusive responsibility of their respective manufacturer, and this decision will be communicated to the claimant with all its consequences.

2- Reasons for immediate loss of guarantee:
2.1- Use of equipment in abnormal working conditions, or used with tractors of different powers than those indicated, in each different case, in our technical literature.
2.2- The substitution of pieces or accessories for others not made or recognised by this company.
2.3- Any repair or alteration done, during the period of guarantee, without our knowledge or authorisation.

3- All claims against the guarantee must be communicated to us by the respective retail agents, by means of a claim form. The pieces or accessories, which are the objects of complaint, must be sent for examination to our Technical Services and Quality Department.
If the reasons for the complaint are confirmed and accepted, new pieces will be supplied, or their value credited to the customer, if already sent.

4 - The powers indicated in our catalogues and other literature as necessary for certain equipment of our construction, may vary according to the different types and states of
the earth, the experience of the operator, the state of the tractor, and the adherence of the latter to the terrain on which it is working.
5 - This company can only accept the return of equipment to the factory, within a maximum of 15 days after the sending of the invoice, providing it has not been used in a working situation, it is not a model already withdrawn from production, or if it is still part of our production range, there have been no alterations made to the model.

6 - In compliance with regulations determined in the Directiva Máquinas/CE (Machines Directive/CE), this company:
6.1 - Manufactures its machines respecting the relevant safety regulations, namely with respect to the protection of moving parts;
6.2 - Supplies a certificate of conformity, referring to the norms and regulations fulfilled;
6.3 - Supplies a user's manual and catalogue of parts for each machine.

NOTE: Every Galucho dealer is obliged to supply the eventual consumer with:
- The safety devices, fixed or detachable, relevant to each machine;
- The certificate of conformity and the user's manual with a catalogue of parts for each machine.

7 - We recommend the reading of our pamphlet: “General Conditions of Sale and Payment”.

8 - For any necessary clarifications, please consult our Commercial Services.

INNOVATIONS

GALUCHO-IND. METALOMECÂNICAS, S.A. continually attempts to perfect its products, reserving itself the right, at any time, to make alterations to the design and/or to the specifications of construction materials, and its respective components, without incurring, as a result, the obligation to apply these alterations to machines previously made and sold.

1- EXPLANATORY NOTE

Although all the models of MCH1/2, CH2, CH3, CH3/4, CH4/5 and CH5 series are dimensionally different, the assembly, adjustments, maintenance, etc. details are the same.
The existing structural differences may be verified in the characteristics table or in the drawings of the corresponding components.

2 - CONSTITUTION

The principal parts of the furrow ploughs are the headstock, and the frame where the bodies are assembled.

3 - ASSEMBLY

The furrow ploughs from this series, are always send assembled to our costumers. However if for any motive something are disassembled, the drawings in annex, must be observed which allows the assembler to understand the global work to be done.

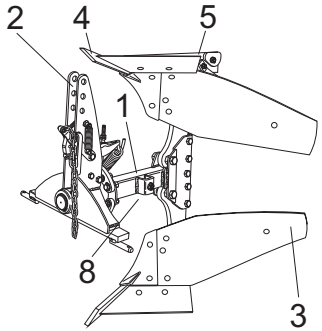

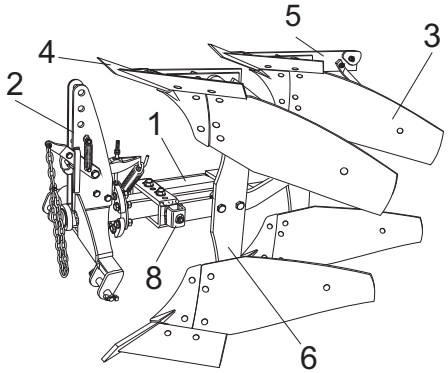

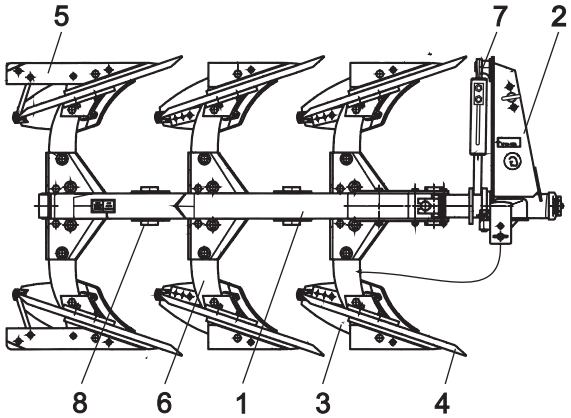

1- Frame; **2**- Headstock; **3**- Mouldboard; **4**- Point bar; **5**- Landside; **6**- Leg; **7**- Reversion cylinder **8**- Scrapper support

4- ATTACHMENT TO THE TRACTOR

Before proceed the attachment to the tractor, you must observe if the gage need to be adjusted, so that the exterior share edge must stay aligne with the internal face of the rear wheel.
In the furrow plough we can adjust the gage, moving the frame, fastening it in the body holes with 2, 3 and 5 different positions as the furrow plough type respectively, MCH1/2, CH2-10/12, 2 holes; CH2-13/14/16/18 and CH3-12/13/14, 3 holes; CH3 /4, CH4/5, CH5, 5 holes.

The attachment to the tractor it is processed as any other mounted implements, should refer the possibility of 2 different height regulations, so much in 2 or 3 bodies by link pins as in the 5 bodies by trunnion bracket, as well as the 3 different connection possibilities of the 3 point bar.
The conjugation of this connection possibilities, results a large versatility for the 3 series.
After the attachment to the tractor, you must align the 2 inferior hydraulic arms. Continuously you must do a lift test, in order to verify if it is everything in order.

5- TECHNICAL SPECIFICATIONS (APPROX.)

MODEL	REVERSION		WORKING WIDTH (m)	WORKING DEPTH (m)	UNDERBEAM CLEARANCE (m)	DISTANCE BETWEEN BODIES (m)	HEIGHT BETWEEN BAR POINTS (m)	OPTIONS		WEIGHT (KG)	REQUIRED POWER	
	MEC.	HID.						DISC	SCRAPPER		KW	CV
MCH1-12/14	X	----	0,30	0,25	0,54	----	1,20	X	X	165	18-26	25-35
MCH1-12/14	X	----	0,50	0,20	0,59	0,61	1,20	X	X	170	26-33	35-45
CH2-10	X	----	0,50	0,25	0,62	0,76	1,36	X	X	320	22-30	30-40
CH2-12	X	X	0,60	0,30	0,62	0,74	1,38	X	X	390	30-40	40-55
CH2-13	X	X	0,65	0,35	0,66	0,78	1,44	X	X	470	40-52	55-70
CH2-14	X	X	0,70	0,35	0,66	0,77	1,60	X	X	570	44-55	60-75
CH2-16	----	X	0,80	0,40	0,66	0,80	1,60	X	X	620	52-63	70-85
CH2-16HR	----	X	0,80	0,40	0,75	0,86	1,66	X	X	720	66-77	90-105
CH3-12	----	X	0,90	0,30	0,75	0,74	1,38	X	X	660	44-59	60-80
CH3-13	----	X	1,00	0,35	0,75	0,73	1,44	X	X	700	63-77	85-105
CH3-14	----	X	1,05	0,35	0,75	0,72	1,60	X	X	770	66-81	90-110
CH3/4-14	----	X	1,05/1,40	0,35	0,69	0,72	1,65	X	X	1140/1400	81-100	110/135
CH3/4-16	----	X	1,20/1,60	0,40	0,69	0,69	1,65	X	X	1160/1425	96-115	130/155
CH4/5-14	----	X	1,40/1,78	0,35	0,69	0,72	1,65	X	X	1400/1660	100/118	135/160
CH4/5-16	----	X	1,60/2,05	0,40	0,69	0,69	1,65	X	X	1425/1685	115/132	155/180

6- ADJUSTMENTS

To obtain the excellent work quality preview in the furrow ploughs conception, it is necessary regulate them conveniently, as it is indicated.

6.1- HORIZONTALITY

Acting under the 2 hydraulic arms so that them stay with the same length,we adjust the transverse horizontality.
Extending or reducing the 3 point bar lenght adjusts the longitudinal horizontality.

6.2- ATTACK ANGLE

It is the angle measured in the horizontal plane between the share board and the ditch wall.
As larger is the attack angle, more larger is the work wight and the required power, but this regulation seek fundamentally the furrow plough equilibrium.
In heavy soils, when the reaction in the tractor direction oblige the front right wheel to lean in the ditch wall, it is necessary to reduce the attack angle.
In light soils it will be able to increase the attack angle.
In this series this regulation and it is obtained by moving the frame, using the torn hole and after chosen the desired angle, tighten the fixation screws.

6.3- WORKING DEPTH

This regulation is obtained using the tractor depth control and in some models by depth/transport control wheel.
In avoid to obtain a good penetration in heavy soils we recommend to move forward the bar point in one hole. The bar point leaves the factory with 6 to 7 cm from the share`s end.

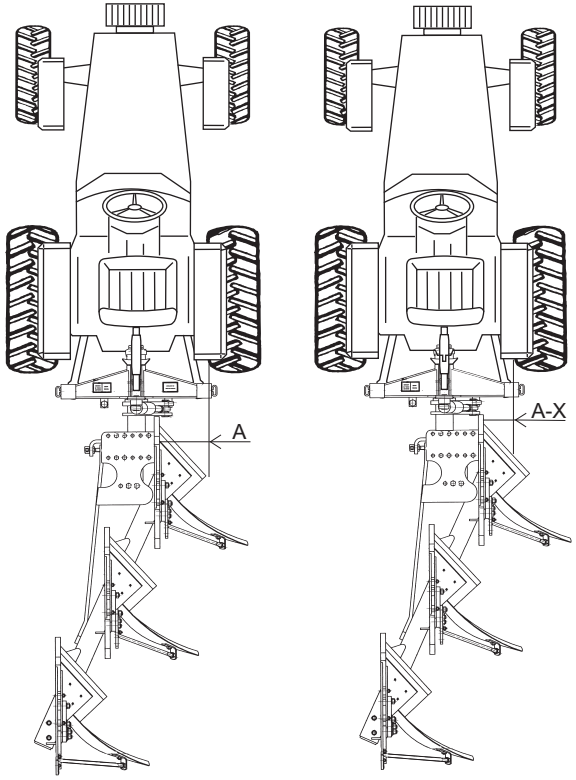

Correcto Incorrecto

6.4- REVERSION

The furrow plough reversion results from a 180° rotation that the assemble formed by the bodies, frame and axle, doing in relation to the headstock and through the one which it feels the passage from the work position to the symmetric.

6.4.1- MECHANICAL

Manual - The adjusting nut be must totally down. Consider that the lock nut must not move in relation to the position that it leave the factory.
With the furrow plough mounted in the hydraulic three points and lightly lifted up, it is pull the lever and the furrow plough under her own weight turn 1/4 and at the same time it is necessary push the same lever to complete the reversion.

Automatic - If you want to use the automatic reversion, when you assemble the furrow plough you must assemble the reversion chain in a central point on the tractor, in way that her length allows that the reversion take place in the end of the hydraulic lift.
The adjusting nut must stay at half way between the lock nuts and the latch, adjusted in way for that the reversion did without a big impact.
You must lower the adjusting nut if there is a big impact or go up her if the reversion don't feel.
When the soil is very adherent the reversion will be difficult, in this case you must turn up the adjusting nut.

6.4.2 - HYDRAULIC

The reversion is obtained by the action of the hydraulic cylinder, commanded by the operator.

6.5 - ACCESSORIES

6.5.1- DISC

The only regulation is the work heigh that is obtained trough the screw .

6.5.2- SCRAPER

The scrapers have regulations in height , that is obtained through the respective screws.
They must work at lower profundity - at about 5 cm - height necessary to cut a ridge and provoke the burying of the organic residues.

6.5.3 - FURROW WHEEL

The furrow wheel can have 7 different regulation types.
In case of wheel tyres, mounted in the CH3/4, CH4/5 and CH5 series , they can be used as transport wheels.

VERTICALITY

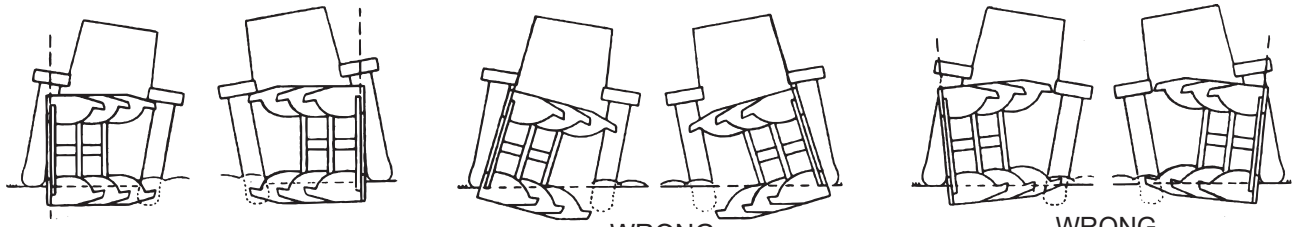

RIGHT WRONG WRONG

HORIZONTALITY

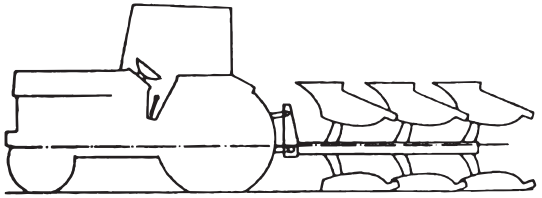

RIGHT

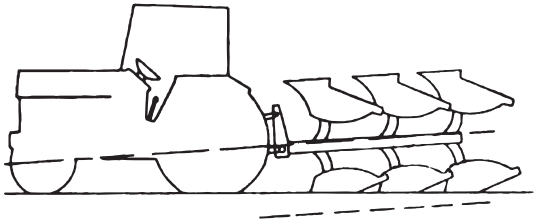

WRONG

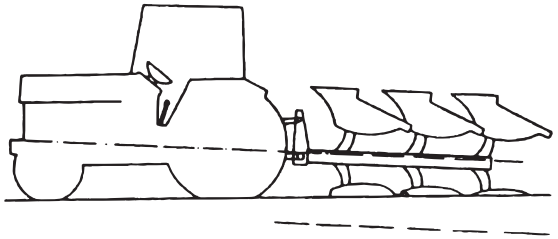

WRONG

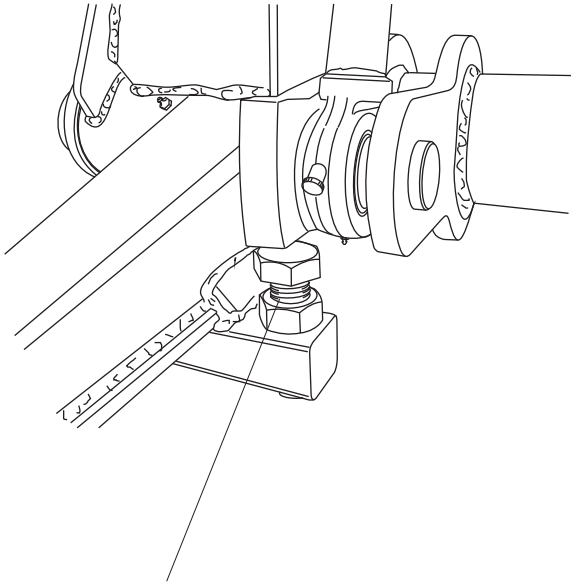

VERTICAL TUNNER

7 - WORKING

The body reversibility allows doing the farming known as “go and come”. The reversion system can be manual, automatic or hydraulic as described in 6.4. Any of these systems do the plough rotate 180º in relation to the headstock and prepares the system for a new reversion, with a simple ascent movement of the furrow plough, done by the action in the lever or hydraulic command.

7.1- AVERAGE WORKING PERFORMANCE

Although work performance may vary due to a number of factors, it is useful to state the process for determining it.
It is necessary to know:
Ws - Average speed of working, in km/h
Ww - Working width (m)
Fe - Field efficiency. This is a corrective factor which varies for each type of work, and which is a consequence of different determining factors, such as: type and state of the soil being worked; configuration and size of the land; efficiency and effort of the operator, etc. Without too much risk of error, we can assume an average factor of Ec=0,8.

Example:
What is the average working performance of a plough with a working width of 0.60m, working at an average speed of 6 km/h?

$$Rm = \frac{Vtx\ Lt\ xEc}{10} \qquad Rm = \frac{6 \times 0{,}60 \times 0{,}8}{10} = 0.288 ha/h$$

8 - MAINTENANCE

To maintain any implement in perfect working condition, and to guarantee that it has a long and profitable working life, avoiding the loss or premature wearing of its components, it is essential that some care and maintenance be invested in it, over the following periods:

8.1- DAILY

Carefully check the entireplough, especially:
- The tightness of screws, nuts;
- The preservation condition of the bearings, hoses and hydraulic cylinders.

8.2- DURING WORK

- When operating a new machine, retighten all nuts at the end of the first day’s work.
- Lubricate the plough according the following schedule:

- Every 8 hours of work:
- With Grease 2, or equivalent - all the grease nipples of the various articulations
- With oil, the remaining mobile points;

- Every 50 hours of work:
- retighten all nuts

8.3- IN CASE OF PROLONGED STOP

- Carefully wash the furrow plough with pressurized water and shelter it from sun and rain.
- Carry out an overhaul, retighten and replacing whatever is necessary.
- Start the hydraulic cylinders so that the pistons are brought in;
- Perform any necessary painting retouches, do a general lubrication.

Following the previous procedures will assure the ploughs, perfect work conditions for the next campaign.

Remarks:

- Always clean the grease nipples, before and after lubrication;
- Pump as many times as necessary until clean greases comes out.

9- REPLACING THE PARTS OF GREATEST WEAR

The parts of greats wear are the share, the landside, point bar , shins and the moldboards.
Their replacement is very easy and can be done by perfome under the respective screws .
Their useful life depends, on the use, conditions and care with maintenance .

Disc Coulters and Skimmer

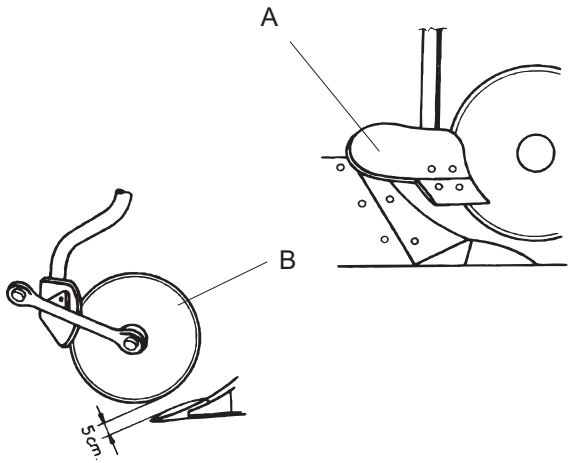

A- Skimmer
B- Disc coulter

10- SECURITY REGULATIONS

Working with tractors and agricultural machines requires that the operator knows what he is doing and that much care is taken. He must be conscious and cautious of the dangers which imprudence can cause, not just to the agricultural enterprises which they run. In an attempt to avoid accidents, therefore, we advise the following security rules:

1 - In attaching any implement to the tractor, use only the place which the respective manufacturer advised for the operation, verifying is carried out in order. .

2 - Whenever, for reasons of repair, checks, set-up or otherwise, you need to get under the implement, never do so without the relevant props.

3 - In activating the hydraulic system of the tractor, first check that the implement, trailer, frontal load, or otherwise, in movement, can not reach anyone.

4 - Never authorise the transport of passengers on the implement, whether during work time or on the road, equally not behind ploughs, or grass cutters, as during their work, as stones, sticks etc. could fly up out of the machines.
.
5 - The implement should never be detached while in movement. If it has to be done, immobilise it well and stop the motor.

6 - Always use protective guards on transmissions linked to the power sockets of the tractor.

7 - Use counterweights on the front or on the front wheels, as, with implements mounted, the steering of the tractor will be very light and it will have a tendency to uplift. Double check the maintenance during a job, manoeuvres or on the road. It could also be necessary to mount a rear weight to the tractor when operating with a frontal load and the load being carried is particularly heavy.

8 - Do not forget that the dangers increase with the incline of the terrain on which it is working or being moved. Exercise maximum caution, paying attention to accentuated inclinations, especially lateral ones, which should be avoided.

9- When you work with trailers, you should never forget to:
- Check your brakes;
- Attach the emergency brake device to the tractor;
- Plug in the electric installations;

Also remember that:
- The trailer must always brake before the tractor;
- All load, especially high load, must be well fastened down;
- The two pins to fix down the box must be in the right places, depending on the side which you need to balance;
- The balancing must be light, and without jolts;
- You may only transport persons when legally authorised to do so, when they are seated, and with all the coverings closed.

10 - Whenever in transit on a public highway remember that:
- On leaving an agricultural property, or a private road, you never have priority of entry into a public road. All other road users, coming from the left or right, have priority over you;
- You must respect the highway code and all signs and light signals;
- The stabiliser switch for the two brake pedals must be on;
- The stabilisers or the chains must be tight so that there can be on lateral oscillation of the mounted implements, which must only be lifted to the height necessary to avoid contact with the ground (about 0,30 cm) or, if the tractor has a hydraulic blockage, until this switches on;
- Speed of travel must be reduced whenever the state or the relief of the road requires it;

If you take this advice which we give here, we hope that you will neither have, or cause any accidents. This is what GALUCHO wishes for, and expects from their clients.

11- ORDERING SPARE PARTS

We advise you, as farmers, that replacing worn out parts at the right moment will avoid abnormal mobilization of the machine (with the consequent loss of money and time), and will cheapen the units of work produced, and prolong its useful, economical life-span.

It is always better to use genuine GALUCHO parts, because:
- They are perfectly interchangeable;
- They guarantee correct adaptation and functioning.

While they could, in some cases, be a little more expensive in terms of initial cost, they always end up more economical than any other.
To simplify and speed up the supply of spare parts, it is recommended, in the consumer's own interests, that this procedure is followed:

1- Indicate the model, series, and number written on the identification plate, which each machine has

2- Outline the quantities, codes, and designation of the parts, as indicated by the catalogue of parts.

3- To avoid errors, written confirmation of orders eventually transmitted by telephone is indispensable.

4- To facilitate the completion of orders, all demands must be made separate from other correspondence, and indicate the destination and the transport to be used. In case the client has no current account with our company, he should enclose with his order, the amount that corresponds to the cost of his demand.

If the demand omits a preference, in terms of means of transport, we will use that which we feel to be most advantageous.

5- The parts can be picked up from our warehouses, in S. João das Lampas, or placed by us in the railway or any other station, in Sintra or Lisbon.

6- The return of parts or equipment whose parts have stopped being made, or which are still part of our production line but have been altered, will not be accepted.

The identification plates GALUCHO indicate the following specifications, which will be useful when ordering spare parts.

1- MODEL 2- SERIE 3- NUMBER

PRATICAL ADJUSTEMENTS ADVICES

		RECOMMENDED MEASURES																			
		EXTEND THE SUPERIOR HYDRAULIC ARM	SHORTEN THE SUPERIOR HYDRAULIC ARM	INCREASE THE ATACK ANGLE	DECREASE THE ATACK ANGLE	LOWER TRANSVERSE BAR	ARAISE THE 3 HYDRAULIC POINTS	GO DOWN THE 3 HYDRAULIC POINTS	USE THE TRACTION CONTROL	BLOCK THE DIFFERENTIAL	BALAST THE MOTRICE WHEELS	REDUCE THE VELOCITY	PUT WEIGHTS IN THE TRACTOR FRONT	ADJUSTE THE TRACTOR GAGE	AVANCE THE POINT BAR	SHARP THE POINT BAR	REGULATE THE DISCS	REGULATE THE SCRAPPERS	ADJUSTE THE TRACTOR DEPTH CONTROL	ADJUST THE REVERSION CHAIN LENTH	ADJUST THE TUNNING NUT
VERIFIED DEFICIENCIES	INSUFFICIENT DEPTH																				
	EXCESSIVE DEPTH																				
	EXAGGERATED DEPTH IN FRONT FURROW																				
	EXAGGERATED DEPTH IN REAR FURROW																				
	EXAGGERATED WIGTH IN FRONT FURROW																				
	INSUFFICIENT WIGTH IN FRONT FURROW																				
	TRACTOR SKATING																				
	TRACTOR RAISE																				
	SKATING																				
	BADLY EMBEDDED VEGETATION																				
	REACTION IN THE TRACTOR DIRECTION																				
	DIFICULTIES IN REVERSION																				

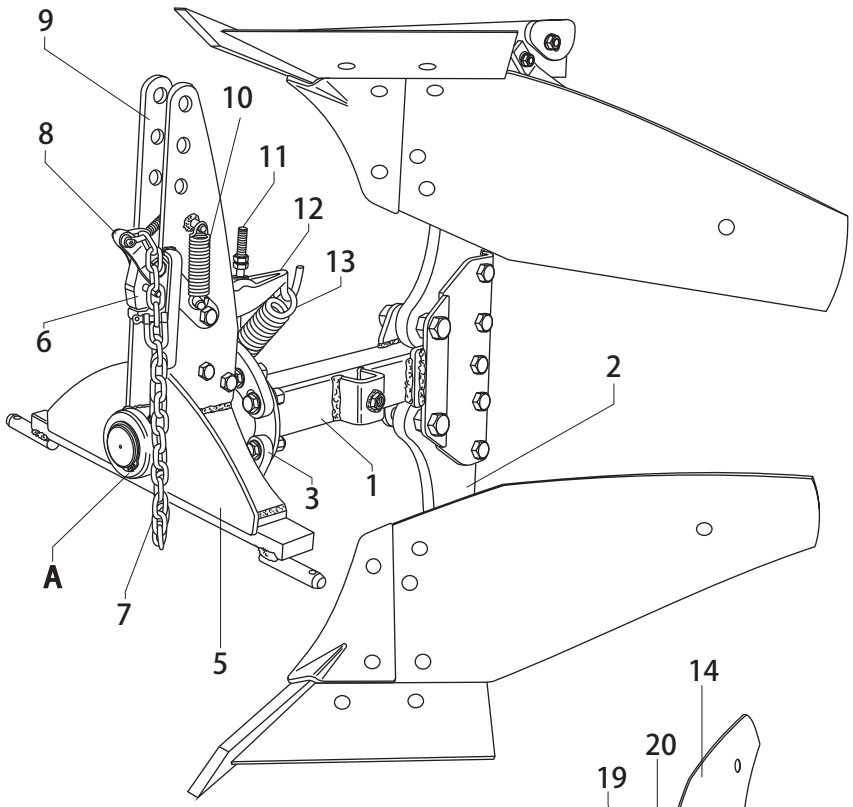

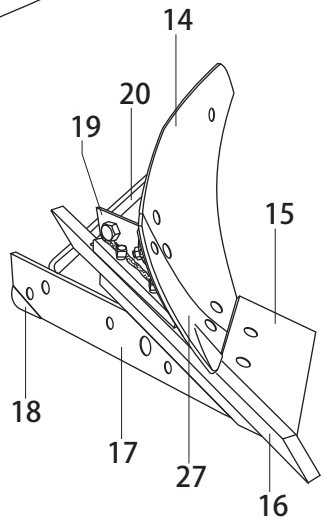

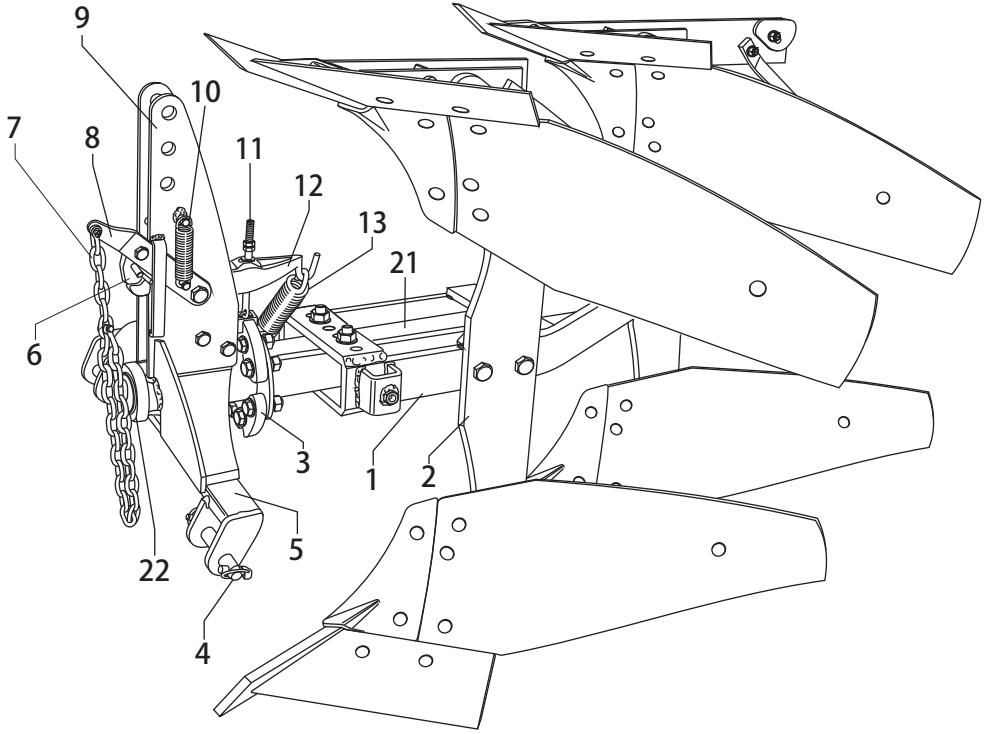

Desen.	Verif.	Alter.	Designa.	Serie MCH1/2	GALUCHO INDÚSTRIAS METALOMECÂNICAS, S.A. S. JO O DAS LAMPAS - PORTUGAL
Data 27/06/05	Data 27/06/05	Data ___/___/___	MINI FURROW PLOUGH	Cod. 21103CP01	

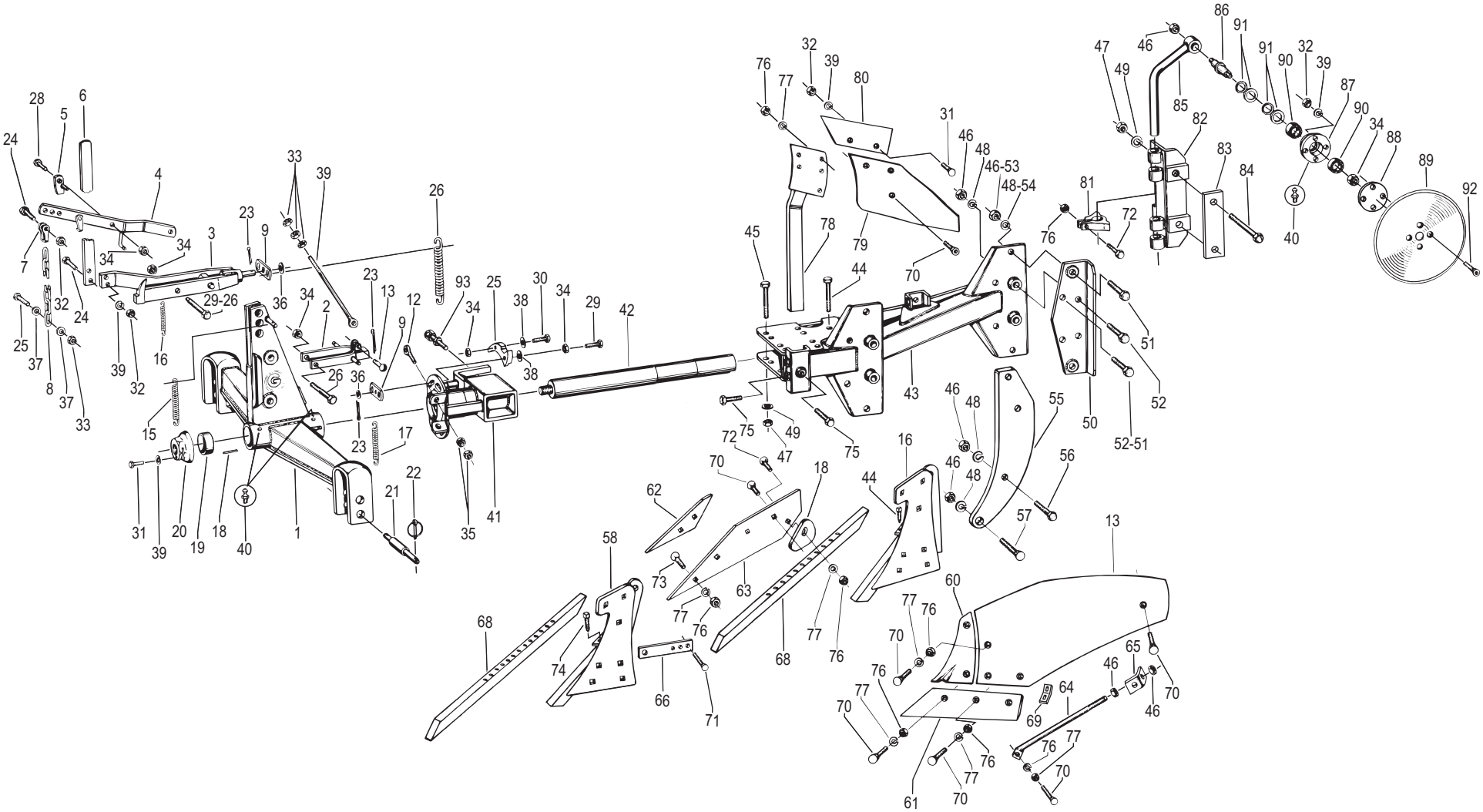

Desen.	Verif.	Alter.	Designa.	Serie CH2-M	GALUCHO INDÚSTRIAS METALOMECÂNICAS, S.A. S. JOÃO DAS LAMPAS - PORTUGAL
Data 27/06/05	Data 27/06/05	Data ___/___/___	**2 FURROW PLOUGHS AUTOMATIC REVERSION**	Cod. 21180CP02	

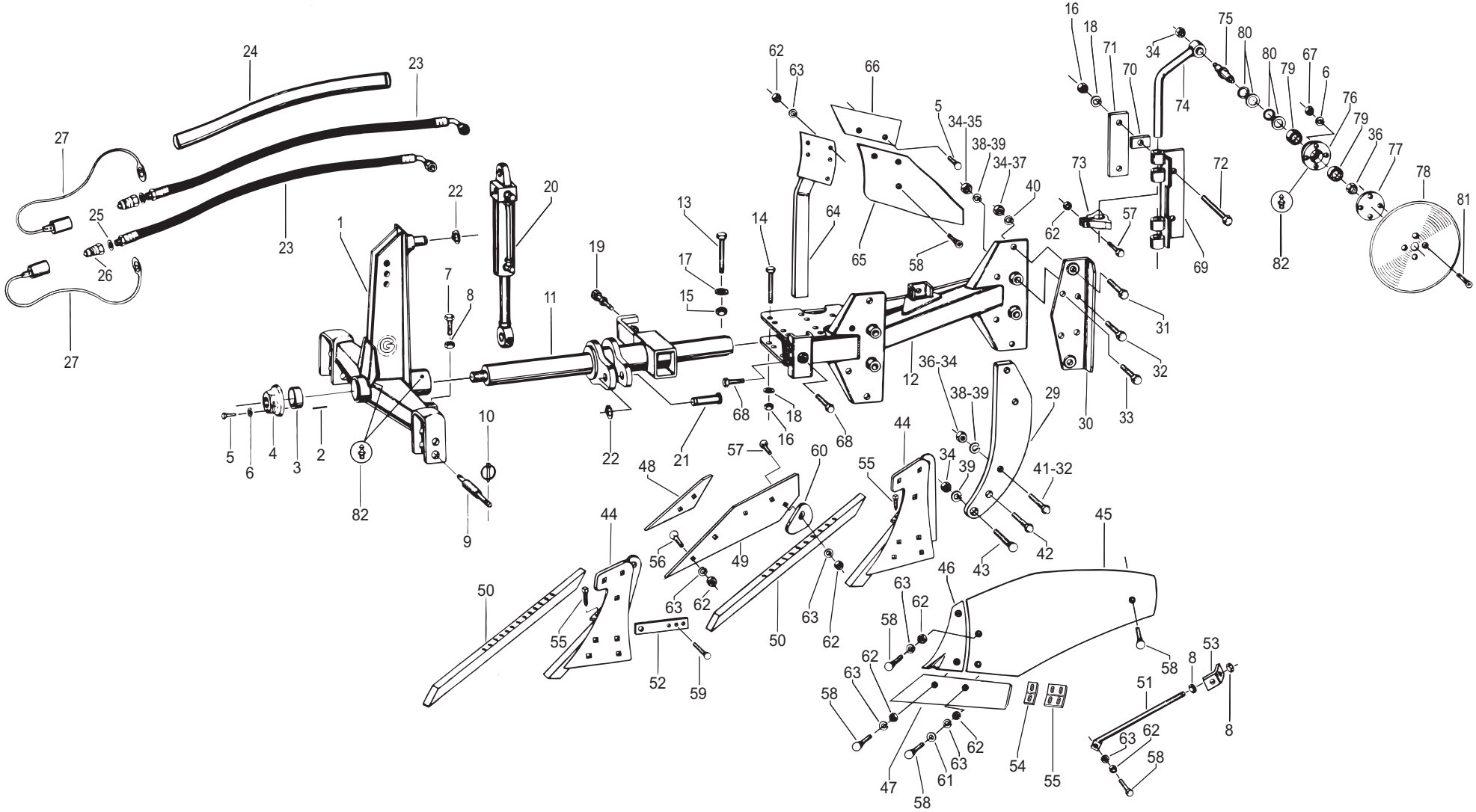

Desen.	Verif.	Alter.	Designa.	**2 FURROW PLOUGHS HYDRAULICREVERSION**	Serie **CH2-H**	**GALUCHO** INDÚSTRIAS METALOMECÂNICAS, S.A. S. JOÃO DAS LAMPAS - PORTUGAL
Data 27/06/05	Data 27/06/05	Data ___/___/___			Cod. 21121CP03	

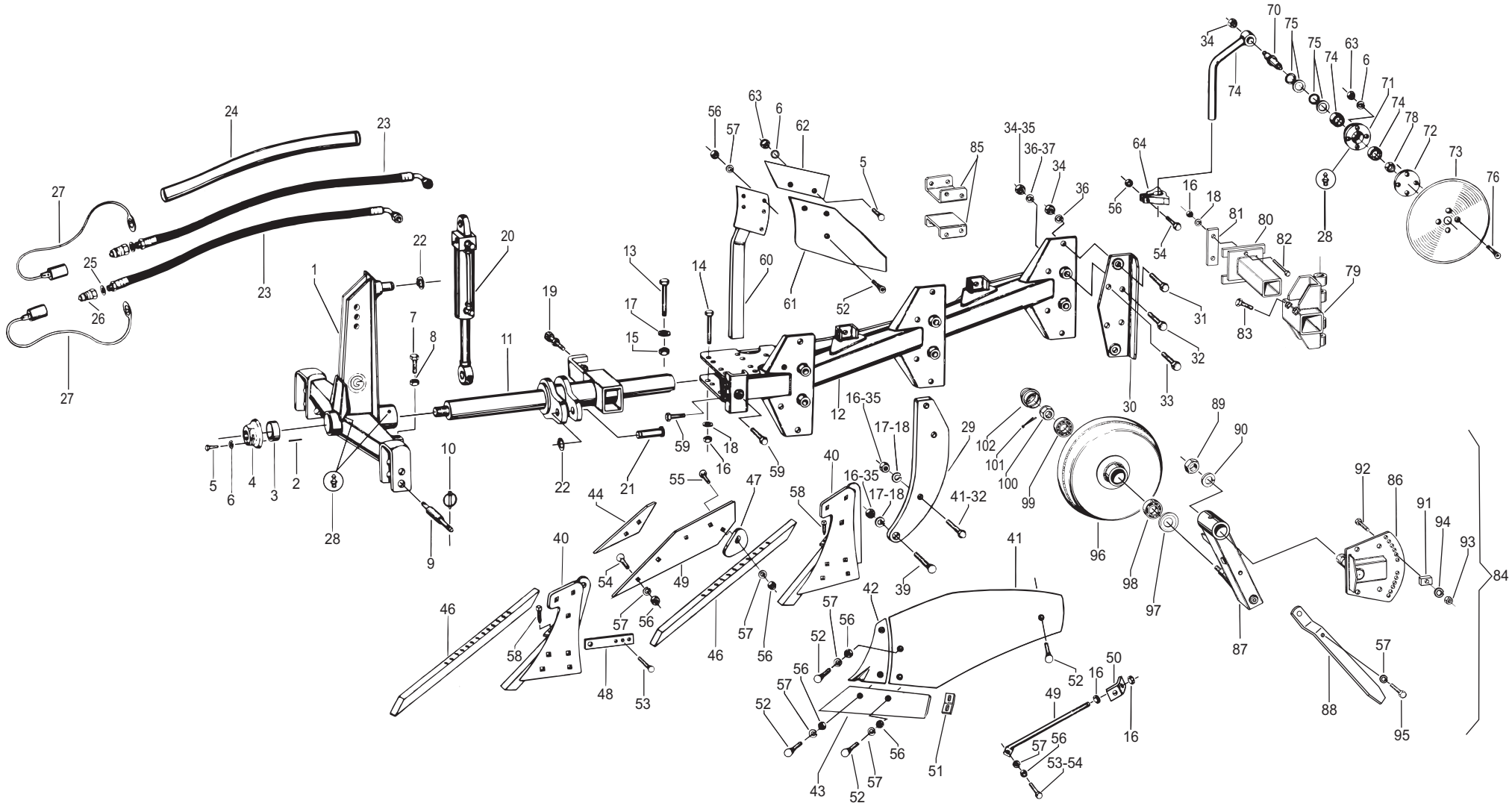

Desen.	Verif.	Alter.	Designa.	Serie CH3-H	GALUCHO INDÚSTRIAS METALOMECÂNICAS, S.A. S. JOÃO DAS LAMPAS - PORTUGAL
Data 27/06/05	Data 27/06/05	Data ___/___/___	**3 FURROW PLOUGHS HYDRAULICREVERSION**	Cod. 21195CP04	

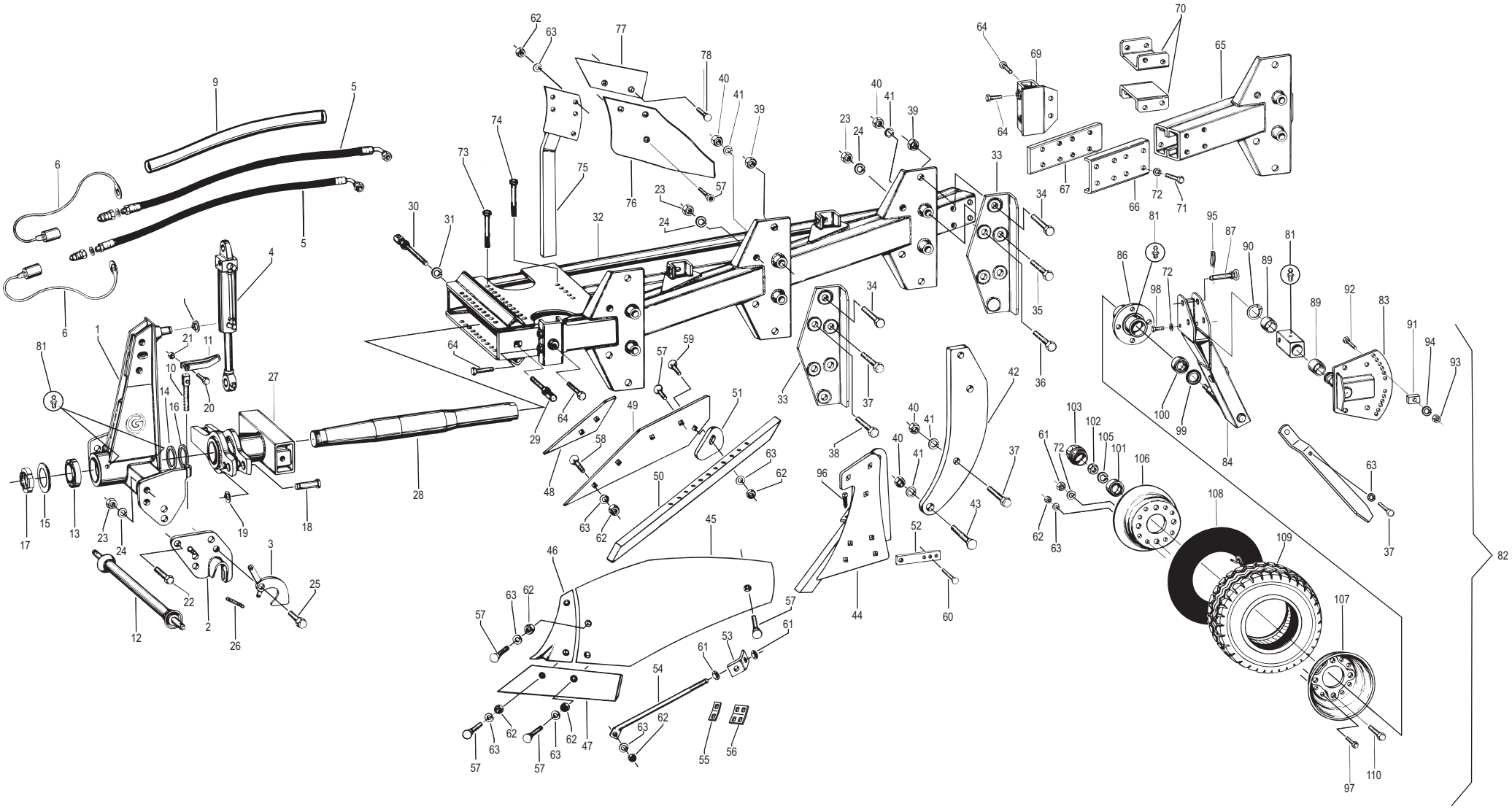

Desen.	Verif.	Alter.	Designa. **3/4 AND 4/5 FURROW PLOUGHS HYDRAULICREVERSION**	Serie **CH3/4-H + CH4/5-H**	**GALUCHO** INDÚSTRIAS METALOMECÂNICAS, S.A. S. JOÃO DAS LAMPAS - PORTUGAL
Data 27/06/05	Data 27/06/05	Data ___/___/___		Cod. 21195CP05	

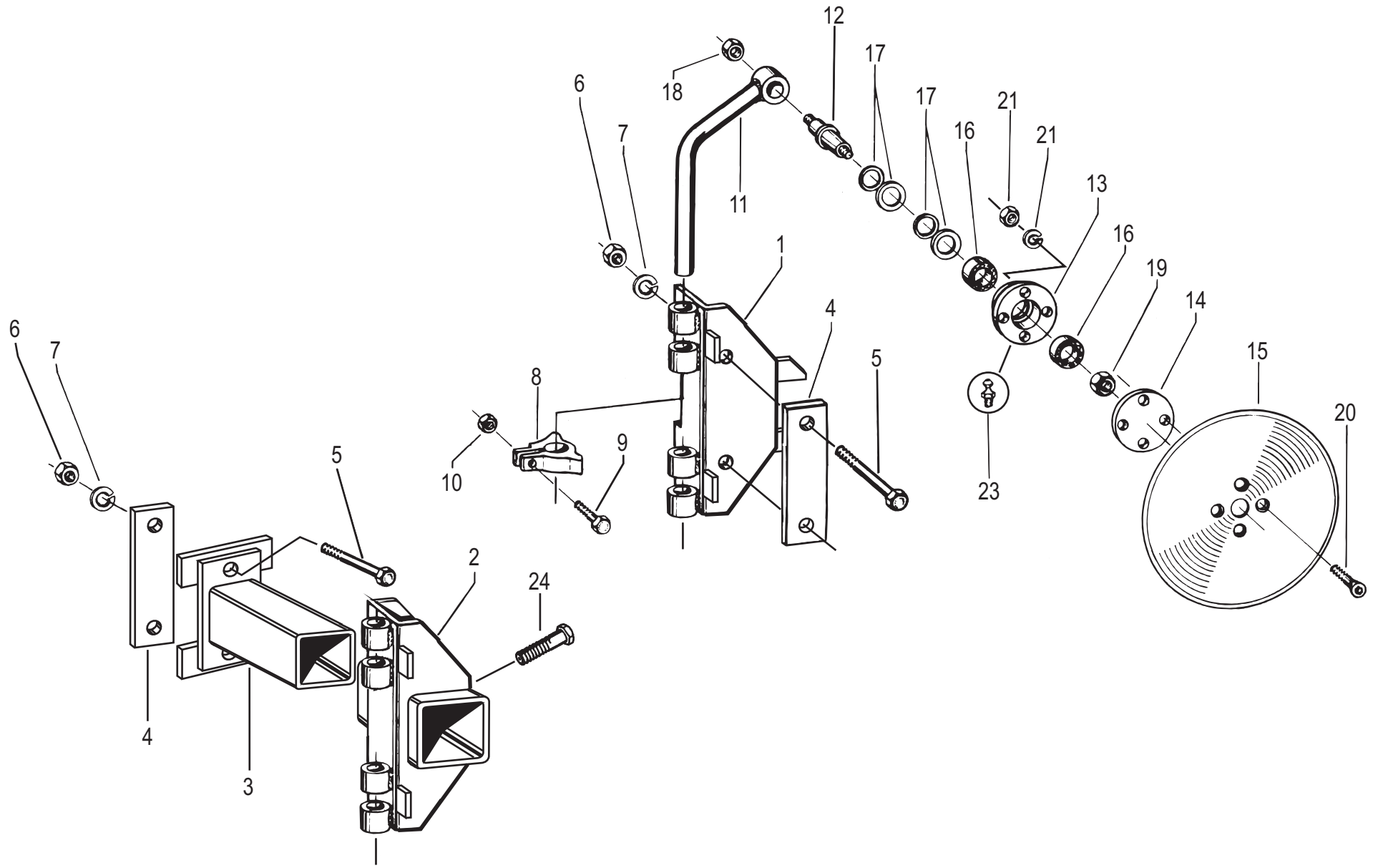

Desen.	Verif.	Alter.	Designa.	Serie CH3/4-H + CH4/5-H	GALUCHO INDÚSTRIAS METALOMECÂNICAS, S.A. S. JOÃO DAS LAMPAS - PORTUGAL
Data 27/06/05	Data 27/06/05	Data ___/___/___	**DISC COULTER**	Cod. 21201CP06	

GALUCHO - INDÚSTRIAS METALOMECÂNICAS, S. A.
(Fundada por JOSÉ FRANCISCO JUSTINO)

AV. CENTRAL, N.º 4,
2705-737 S. JOÃO DAS LAMPAS - PORTUGAL
TELEF.:(351) 21 960 85 00 FAX: (351) 21 960 85 85

www.galucho.pt
agricola@galucho.pt

0605.MCH/CH.3